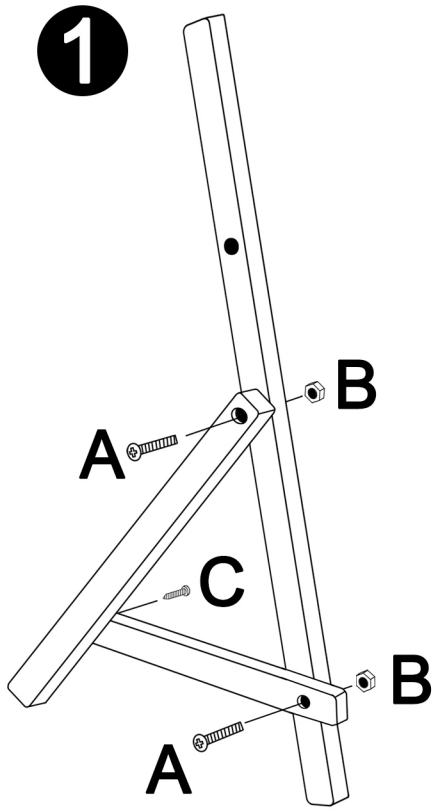
1
B
A
C
B
A

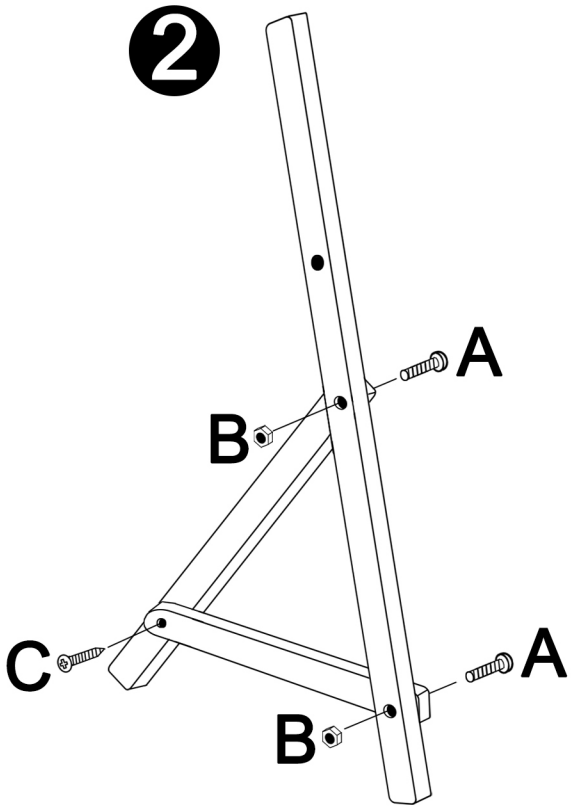
2
A
B
C
A
B

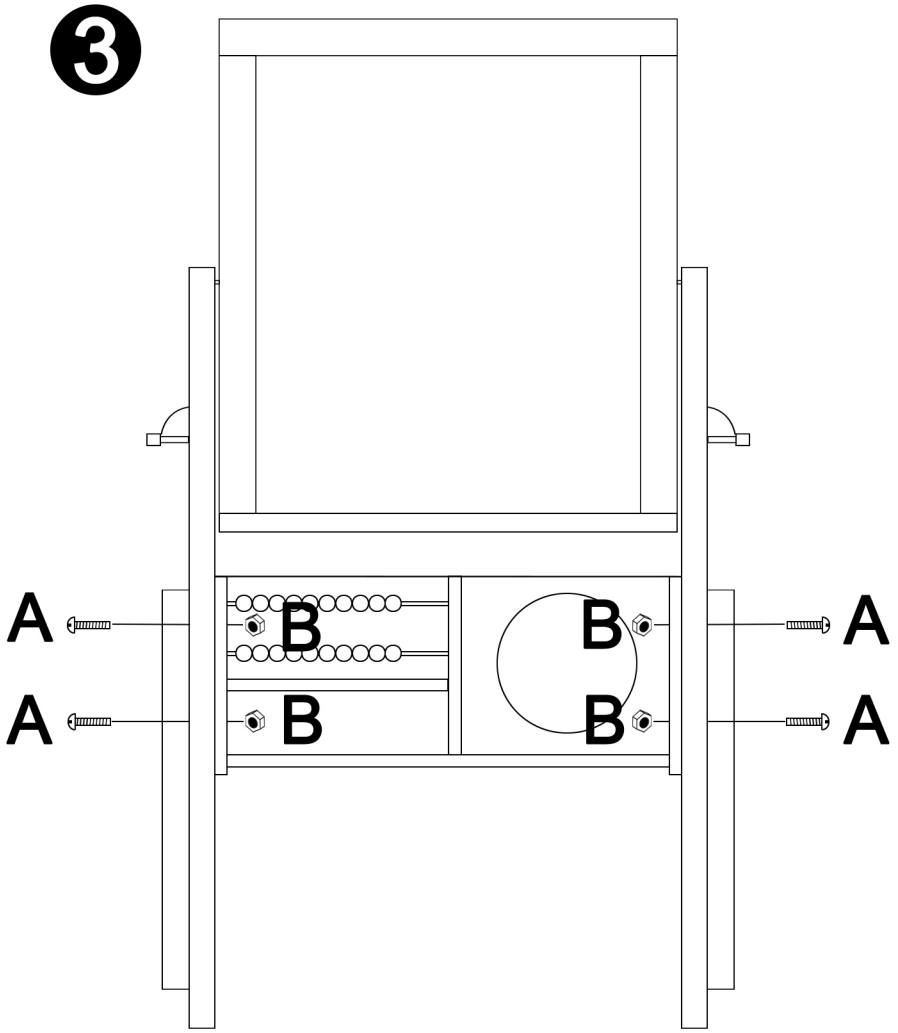
3
A
A
B
B
B
B
A
A

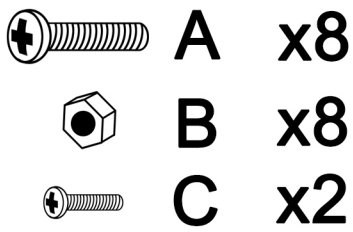
A x8
B x8
C x2

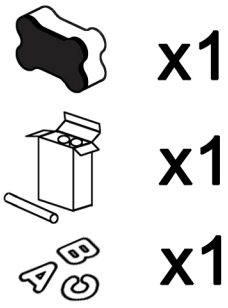
x1
x1
x1